International Journal of Engineering Research and Science & Technology

IJERST

ISSN : 2319-5991

www.ijerst.com

Email: editor@ijerst.com or editor.ijerst@gmail.com

ISSN 2319-5991 www.ijerst.com

Vol. 14, Issue 4, 2018

OPTIMIZED DESIGN OF HYBRID ENERGY STORAGE SYSTEMS FOR ENHANCED PERFORMANCE IN DC MICROGRID APPLICATIONS

[1]Dr. Kiran Jyothi Miryala,[2]Sneha Vallakatla,[3]S.Manoj Kumar,
[12]Assistant Professor,[3]Student

Department of EEE

Abdul Kalam Institute of Technological Sciences, Kothagudem, Telangana

ABSTRACT:

Due to easy integration with renewable energy sources as well as proliferation of dc-compatible loads, dc micro grids are gaining popularity. Because of high penetration of renewable energy sources in dc micro grids, these micro grids are highly susceptible to fluctuations in power generation. This is harmful so long voltage stability is considered. To absorb these fluctuations within, a battery based energy storage system and hybrid energy storage system (HESS) consisting of battery and super capacitor (SC) are proposed. The contrasting characteristics of battery and super capacitors make them a perfect combination for HESS applications. The HESS is interfaced to dc micro grid using a double-input bidirectional converter. This bidirectional converter provides decoupled control of battery and super capacitor power. This thesis presents a converter modeling method for the double-input bidirectional converter. A controller was designed based on this for voltage regulation application for a dc micro grid. The operation of converter made it possible to use same controller for both HESS charging and discharging operation thus making it a unified controller. The designed controller was also able to reject disturbances from source side as well as load side while maintaining the voltage stability of dc micro grid. Operation of the converters and performance of designed controller in voltage stability were validated with simulation results for both battery alone storage system and hybrid energy storage systems.

Keywords: hybrid energy storage system; super capacitor; bidirectional converter; dc micro grid

I. Introduction.

As fossil fuels are diminishing therefore there is a demand for renewable energy sources has been increased in the power sector. Also due to the usage of fossil fuels, there is a lot of impact on the environment. To avoid this environmental pollution gradually we are switching towards renewable energy sources, while solar energy has greater demand amongst other renewable energy sources. In 1954 Photovoltaic technology is born in the United States when Daryl Chapin, Calvin Fuller, and Gerald Pearson develop the silicon photovoltaic (PV) cell at Bell Labs the first solar cell capable of converting enough of the sun's energy into power to run every day electrical equipment.

1.1 Supercapacitor

It stores the energy in the form of charge difference appearing on its positive and negative plates separated by some distance. Supercapacitors also called as double layer capacitors is similar to conventional capacitors except that it has high capacitance value due to its bigger plate area and less distance between

ISSN 2319-5991 www.ijerst.com

Vol. 14, Issue 4, 2018

plates as:

$$C = \varepsilon \frac{A}{d}$$

The supercapacitor is used mostly where fast charging and discharging processes are to be done and it provides high current pulse. Maxwell 16V, 500F supercapacitor as shown in Fig 1.1.

Fig 1.1 supercapacitor

1.2 hybrid energy storage systems (HESS)

Many energy storages are presently used but no device can provide rapid response for a long time- span. Two important terms are useful especially while designing hybrid energy storage systems, namely Energy Density and Power density. Fig 1.2 divides the energy storage systems in two parts, one having high energy density and other with high power density.

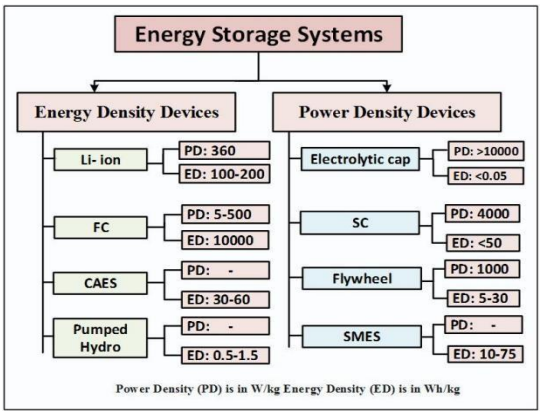

Fig 1.2 Classification of different energy storage systems

1.3 Micro Grid System Configuration

The block diagram of DC microgrid configuration as shown in Fig.1.3. In DC microgrid PV power is the major source to supply to the load. The output power of PV array is fully controlled by using boost converter to regulate the DC grid voltage.

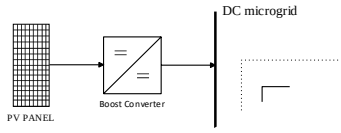

Fig.1.3 Micro grid system configuration of the proposed system.

In off grid mode of operation, the imbalance power needs to be taken care of by the energy storage.

II. Proposed Configuration

2.1 PROPOSED TOPOLOGY

Figure 2.1 shows the schematic of proposed topology. The given topology consists of a boost converter, a Bi-Directional DC-DC converter connected through inductors. The given topology has a boost converter with V_{DC} as input voltage, L as source inductance, a diode D, filter capacitance C_f, switch S and a load resistance R_L. Bi-Directional buck boost converter is chosen using a configuration similar to inverter two-leg configuration. Where the switches S1, S2 are connected in first leg and switches S3, S4 are connected in second leg. D1, D2, D3, D4 are the antiparallel diodes of switches S1, S2, S3, S4 respectively. To understand the working of the proposed topology the modes of operation are explained in step by step manner as follows. First the operation is explained using a single-leg structure and then the control strategy for two leg system are explained.

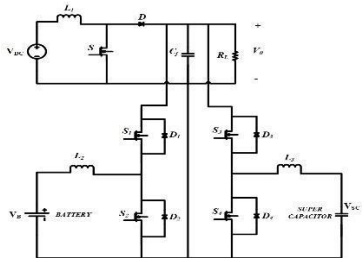

Fig 2.1 Architecture of the DC micro grid system with battery and super capacitor

International Journal of Engineering Research and Science & Technology
ISSN 2319-5991 www.ijerst.com
Vol. 14, Issue 4, 2018

HESS.

2.2 DC Microgrid configuration using battery alone

A single source Bi-Directional DC-DC converter is used to regulate the DC microgrid with battery is connected is shown in Fig.2.2. The Photovoltaic panel is designed for MPP voltage of 12V is is emulated by using regulated power supply of 0-24V/0-3A and is connected input to the boost converter.

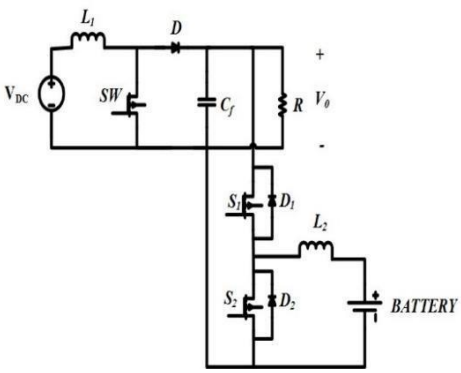

Fig 2.2 Architecture of the DC micro grid system with battery.

The output side of boost converter, a battery is connected using complimentary switching devices.

In Fig 2..2 switches S1 and S2 are complimentary. Diodes D1 and D2 are the feedback diodes to switches S1 and S2 respectively. The high frequency inductors L1 and L2 are connected to the boost converter and battery side. The high frequency inductors are sufficiently high to make continuous conduction mode.(CCM) and to maintain constant DC. C_f is filter capacitance, it keeps output voltage ripple under control and R is load resistance.

2.2.1 Mode-I: Power flow from DC grid to battery(charging mode)

The battery charging operation is explained in Fig.2.3. The battery charging is possible only when increasing PV generation or reducing the load demand. If PV generation increases load demand is constant, the excess power existing at load side. According to the switching logic, excess power charges the battery to maintain the grid voltage constant. In Fig 2.3(a) switches S1 turn ON and S2 turn OFF current flow from DC microgrid to battery (charging operation of battery).

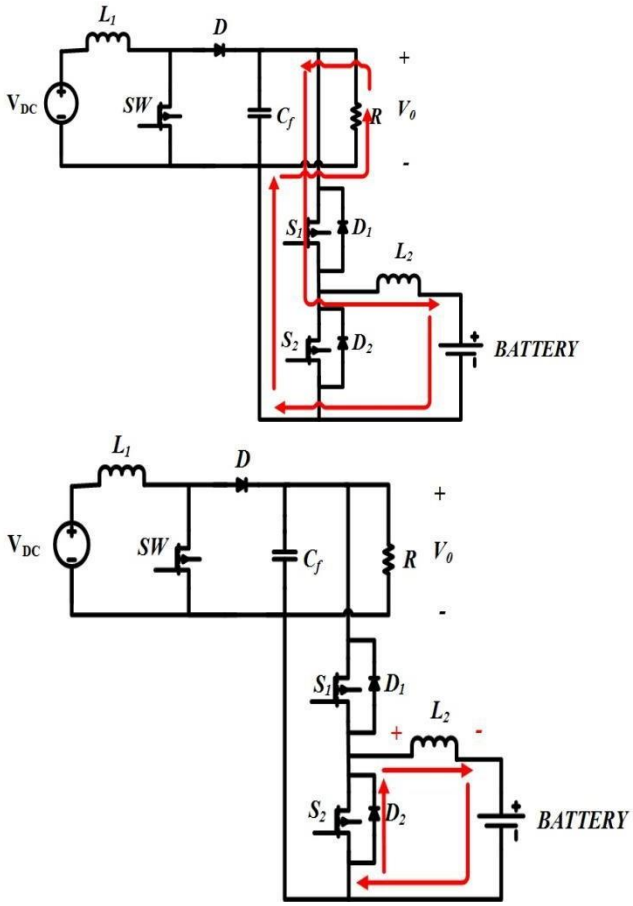

(a) S1 ON, D2 OFF, S2 OFF, D1 OFF (b) S1 OFF, D2 ON, S2 OFF, D1 OFF

Fig 2.3 (a), (b) ESS charging operation (Buck Operation).

Later switch S_1 is turned OFF and D_2 gets forward biased to store energy into battery from inductor which is given in figure 2.3 (b). Solid line indicates the flow of current within the circuit.

2.2.2 Mode-II: ESS Discharging

The discharging operation of battery is possible only when decreasing PV generation

International Journal of Engineering Research and Science & Technology
ISSN 2319-5991 www.ijerst.com
Vol. 14, Issue 4, 2018

and increasing load demand. For this case a deficit power exist at DC microgrid, immediately battery discharge to supply deficit amount of power to maintain the grid voltage constant.

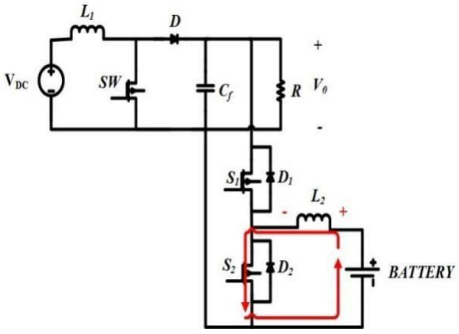

(a) S1 OFF, D2 OFF, S2 ON, D1 OFF

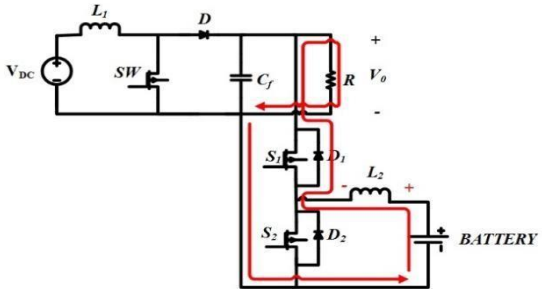

(b) S1 ON, D2 OFF, S2 OFF, D1 OFF

Fig.2.4 (a), (b) ESS discharging operation (Boost Operation).

When DC grid voltage less than the PV generation than immediately battery discharge and supply power to DC grid to maintain the grid voltage constant. Switch S2 is turn ON and stores energy in inductor by using battery. Inductor stores energy as shown in with current directions as shown in Fig 2.4(a). After the next switching state sum of battery voltage and inductor voltage is greater than DC grid voltage, than turn OFF the switch S2 and diode D1 turn ON so power frow from battery to DC grid to maintain the grid voltage constant. Bi-Directional power flow between source and load as shown in Fig.2.5.

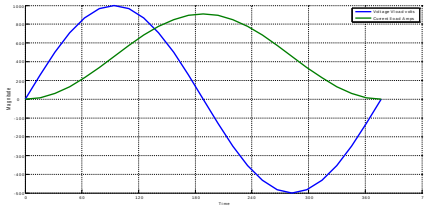

Fig.2.5 Graphical representation of bidirectional power flow.

2.3 Micro Grid Operation with Hybrid Energy Storage System

Two-input bidirectional converter is used to control charging/discharging operation of HESS. It consist of four bidirectional switches connected in H-bridge configuration as shown in Fig.2.2.1. The two switching legs are connected to DC microgrid. Battery and SC are connected to the each leg through the high frequency inductors. The two modes (charging/discharging) of operation are explained in the following sections.

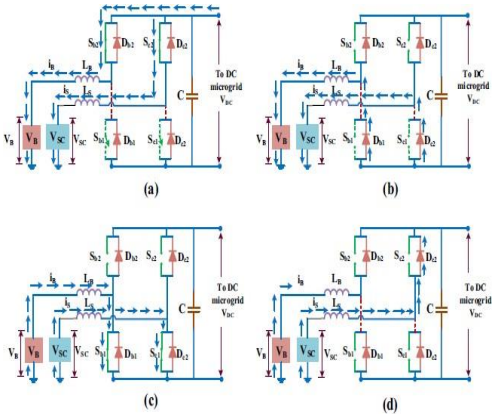

Fig 2.6 Equivalent circuit of two-input bidirectional converter in charging/discharging mode

2.3.1 HESS Charging

In this mode of operation, battery and SC absorbs the excess power from the DC microgrid to maintain the grid voltage constant. The switches S1 and S3 are operated with duty ratios DB and DS respectively. The battery and SC charge according to energy management control logic to maintain the grid voltage constant. Equivalent circuit of two-input bidirectional converters are shown in Fig

International Journal of Engineering Research and Science & Technology
ISSN 2319-5991 www.ijerst.com
Vol. 14, Issue 4, 2018

2.6.

$$V_B = D_B \cdot V_{dc} \quad (2.1)$$

$$V_S = D_S \cdot V_{dc} \quad (2.2)$$

In this mode power flow from DC microgrid to battery-SC bank. The DC microgrid is in higher potentioal compared to battery-SC bank. Thus converter operates in buck mode in order to charge the HESS. Equations (4), (5) represents the buck operation of the Bi-Directional DC-DC converter.

2.3.2 HESS Discharging

In this mode of HESS operation, battery-SC bank supply power to the DC microgrid. The bidirectional converter operates like boost mode by operating switches S2 and S4.

$$V_{dc} = \frac{V_B}{1 - D_B} \quad (2.3)$$

$$V_{dc} = \frac{V_S}{1 - D_S} \quad (2.4)$$

In each switching leg, devices conducts in complimentary fashion. Thus only one gate circuit is required for each switching leg. Equations (6), (7) represents the boost operation of the Bi-Directional DC-DC converter.

III. Control Strategy

3.1 Control Strategy for Energy Management in HESS

The control block diagram for HESS for DC microgrid configuration as shown in Fig 3.1. The proportional and integral controller technique is used for controlling switches. The DC grid reference voltage compared with actual output voltage, some voltage error is generated. The voltage error is applied to the PI controller, PI controller gives total current supplied to the hybrid energy storage systems. The total current demand is passing through the low pass filter (LPF), it separates average component of current demand and transient component of current using LPF. Steady state or average component is referred as reference current to the battery current control loop. Transient current component is used as the reference current to the SC current control loop. Actual battery and SC currents are compared with reference currents errors generated. PI controller generates the duty ratios of Db and Ds for battery and SC.

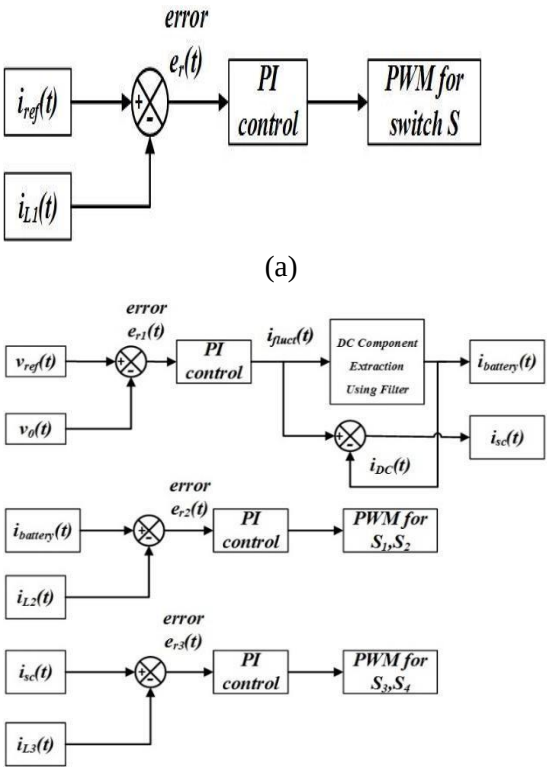

Fig.3.1 a) Control logic of boost converter in HESS (b) Control logic of Bi-directional buck-boost converter for battery and super capacitor.

The control to inductor current transfer function is given as follows [12]:

I

ISSN 2319-5991 www.ijerst.com

Vol. 14, Issue 4, 2018

$$G_{i_S d_S} = \frac{\hat{i}_S(s)}{\hat{d}_S(s)} = \left[\frac{V_0 Cs + 2\frac{V_0}{R}}{L_3 Cs^2 + \frac{L_3}{R}s + (1 - D_S)^2}\right]$$

Inner current loop is faster compared to the outer voltage loop, so in this control scheme bandwidth of inner current loop is selected as switching frequency/6 (fsw/6). For diverting high frequency transient currents the bandwidth for battery control loop is selected as switching frequency/10 (fws/10). For calculation controller gains the phase margin 60^0 for entire work. The proportional and integral abstained are 0.0077 and 90.785 respectively.

IV. Simulation Results

4.1 Simulation results for proposed Scheme Simulation results are developed using MATLAB-Simulink® software 2016 version. 12V, 7Ah Lead acid battery used for this simulation. Switching frequency selected for this operation is 10 kHz. The input to the boost converter is taken as 10V with the help of DC Source. High frequency inductor are designed for boost converter under ripple content. MOSFET switches are used for the simulation study of Boost and bidirectional DC-DC converter.

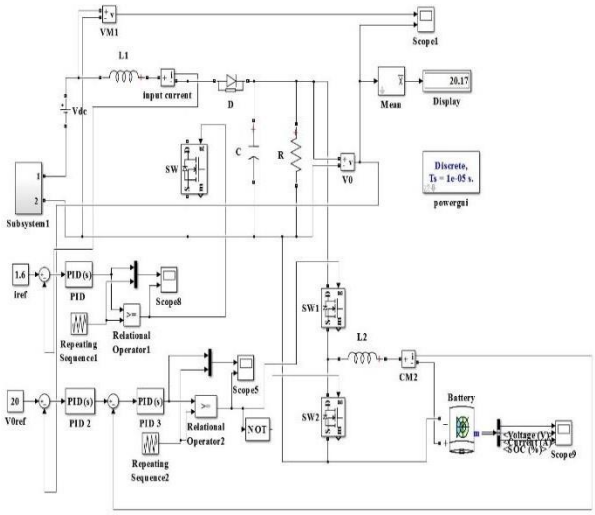

Fig.4.1 Simulation model for the battery alone system.

The simulation model for voltage regulation of DC micro grid using battery based Bi-Directional DC-DC converter is illustrated in Fig.4.1

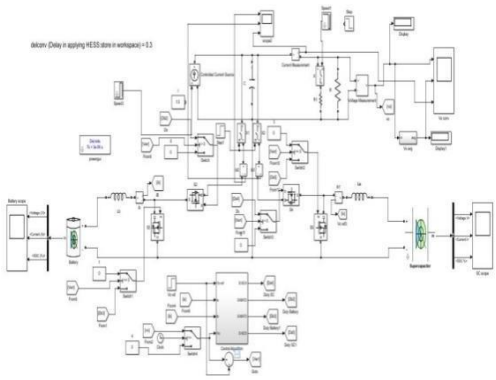

Fig.4.2 Simulation model for the battery-super capacitor combined storage system.

4.2 Simulation Results

In this segment, the results of the proposed technique are displayed and two test cases are considered. The proposed scheme has been made using dSPACE DS 1104 controller board. The control procedure is made using Simulink blocks in MATLAB. With the ultimate objective to exhibit the ampleness of the proposed procedure, it is differentiated and the traditional strategy. The model of lead-acid of 12V, 7Ah is utilized as a battery. Switching

International Journal of Engineering Research and Science & Technology
ISSN 2319-5991 www.ijerst.com
Vol. 14, Issue 4, 2018

frequency is utilized for circuit operation is 10 kHz. With the assistance of a DC source, PV output module is picked as 10V. In light of ripple content, the filter capacitance and inductor are intended for boost converter. For boost and bi-directional DC-DC converters, MOSFET switches are chosen. The software utilized and the hardware prototype created to execute the proposed scheme likewise clarified in this segment. Experimental results are contrasted to simulation results. The proposed approach simulation results for two test cases are examined beneath.

Case.1: Battery Alone System

In this case, the battery alone system is studied. The simulation diagram of voltage regulation of DC Microgrid using battery based bi-directional DC-DC converter is depicted in Fig 4.1.

4.2.1. Step Increase in Source Voltage

Fig 4.3 (a) demonstrates the source voltage with disturbances over the period of time frame. Here, the source voltage is all of a sudden expanded at the time instant of t=1.5 sec which is kept up at 12V up to t=2 sec. At the point when there is no battery storage and bi-directional converter, the output voltage of boost converter is likewise expanded to a value of 24V amid this disturbance period. At the point when a bi-directional converter is associated among battery and grid, the grid voltage is recovered back to 20V utilizing the proposed control strategy.

4.2.2. Step Decrease in Source Voltage

Fig 4.3 (b) demonstrates the source voltage with ESS over a period of time. The source voltage is all of a sudden diminished at the instant of time at t =0.5sec which is kept up at 8V up to t =1sec. At the point when there is no battery storage and bi-directional converter, then the boost converter output voltage is likewise diminished to a value of 16V amid this disturbance period. At the point when a bi-directional converter is associated among battery and the grid, the grid voltage is recovered back to 20V utilizing the proposed control strategy.

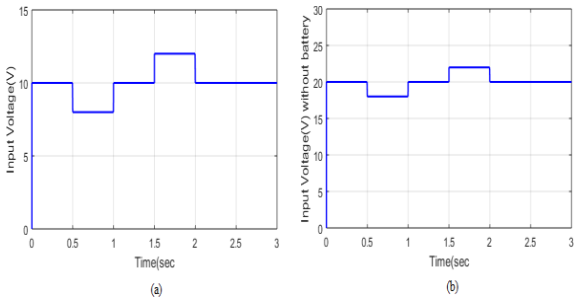

Fig 4.3 (a) Source Voltage With Disturbances (b) Load Voltage Without ESS

4.2.3. Performance Analysis of Battery Alone System

Fig 4.4 (a) demonstrates the graph of battery voltage versus time. It indicates battery performance amid step disturbance in input voltage of source converter. As it is observed from the Fig 4.4 (a) the voltage in the battery is diminished to the operation of discharge from 0.5sec to 1sec amid step decrease in source voltage. Fig 4.4 (b) demonstrates the plot of battery current versus time. In input voltage of step decrease, current in the battery is controlled to supply the deficit voltage at grid. Fig 4.4 (c) demonstrates the state of charge of battery in (%). It is seen from the fig 4.4 (c) amid the duration of step decrease in source voltage, the battery current is expanded and it keeps up a similar incentive till the disturbance is evacuated and SOC % of the battery diminishes. For step increase in input voltage, battery current is controlled in order to supply surplus voltage at grid. For this, battery voltage is expanded at t=1.5sec representing to the charging operation from 1.5sec to 2sec amid step increase in source voltage. It is seen from the fig 4.4 (c) battery current is diminished and keeps up same value

International Journal of Engineering Research and Science & Technology
ISSN 2319-5991 www.ijerst.com
Vol. 14, Issue 4, 2018

till disturbance is evacuated and SOC (%) of battery increments.

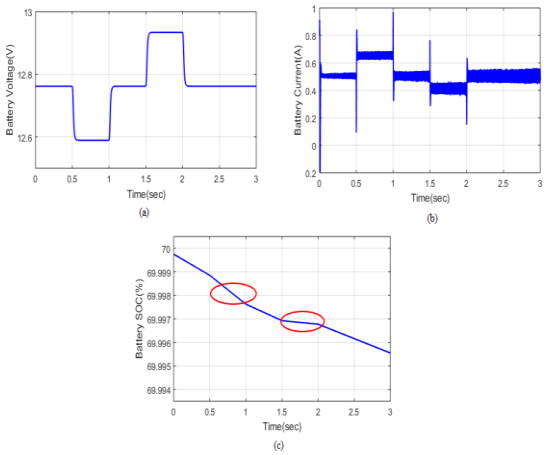

Fig 4.4 (a) Voltage (b) Current (c) SOC % of Battery

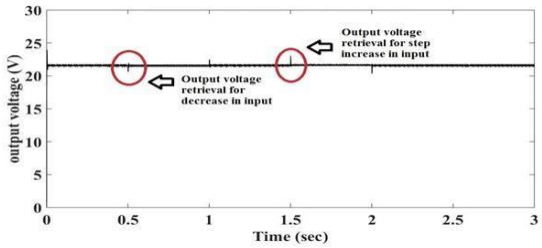

Fig 4.5 Output Voltage with Battery Energy Storage

The output voltage with BES demonstrates Fig 4.5. It outlines the recovery of output voltage while expanding or diminishing in the input voltage. As seen from the Fig 4.5, amid the step decrease in source voltage the output voltage is recovered at the time instant of t=0.5sec. After that the time instant of 1.5 sec, the output voltage is recovered amid the step increase in the source voltage.

Case 2: HESS

4.2.4 Increasing PV generation

Initially HESS is disconnected from DC microgrid, at t=0.1sec to regulate the DC microgrid HESS is connected to DC microgrid. Increasing PV generation analyzed with the help of sudden change in PV voltage from 24V to 30V at t=0.3sec as shown in Fig.4.6. When PV generation more than the load power demand, excess power exist in DC microgrid causes surge in grid voltage at t=0.3sec. Immediately respond HESS and charge extra power exist in DC microgrid to maintain the grid voltage constant. The DC grid voltage regulated fast and stress on the battery reduced compared to battery alone system. The battery and SC performance characteristics are presented in Fig 4.7 and Fig 4.8 respectively.

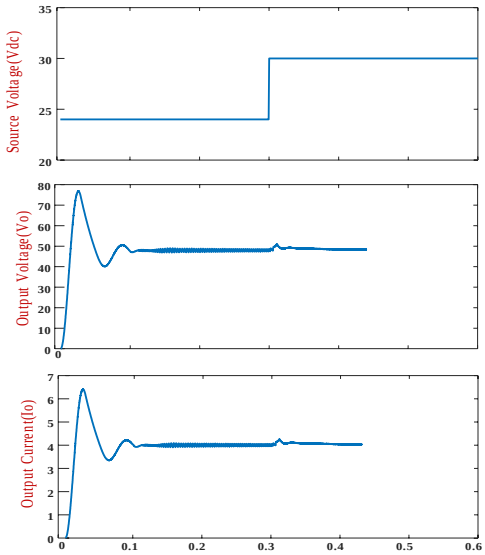

Fig 4.6 Simulation results for step increase in PV generation

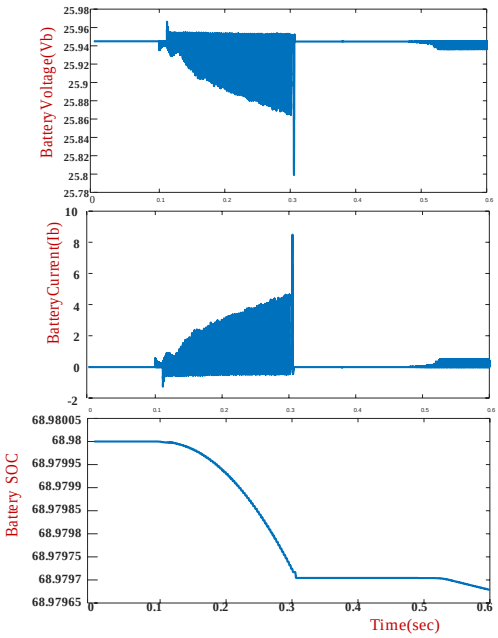

Fig 4.7 Battery scope for step increase in PV

International Journal of Engineering Research and Science & Technology
ISSN 2319-5991 www.ijerst.com
Vol. 14, Issue 4, 2018

generation

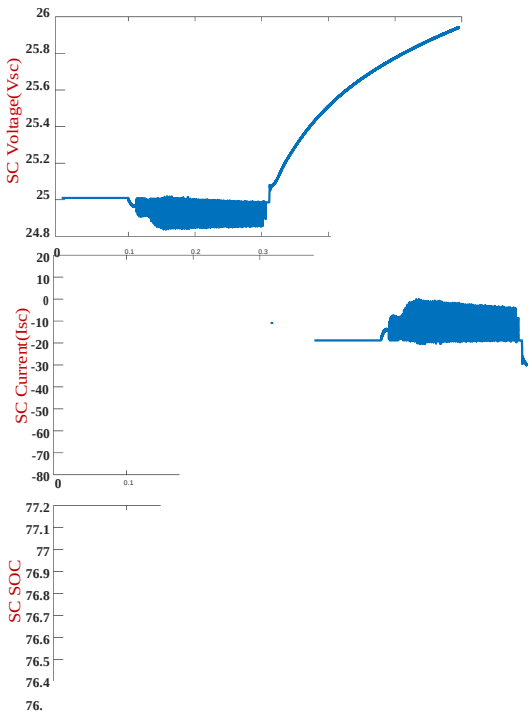

Fig 4.8 super capacitor scope for step increase in PV generation

4.2.5 Simulation results for step decrease in PV generation:

Decreasing PV generation is analyzed with the help of sudden change in voltage from 24V to 20V at t=0.3sec as shown in Fig 4.9. In this case PV generation is less than load demand, surplus power exist at load side. To compensate the surplus power immediately HESS respond to discharge battery-SC bank to maintain the grid voltage constant. The battery and SC performance characteristics for step decreasing PV generation as shown in Fig 4.10 and Fig 4.11 respectively.

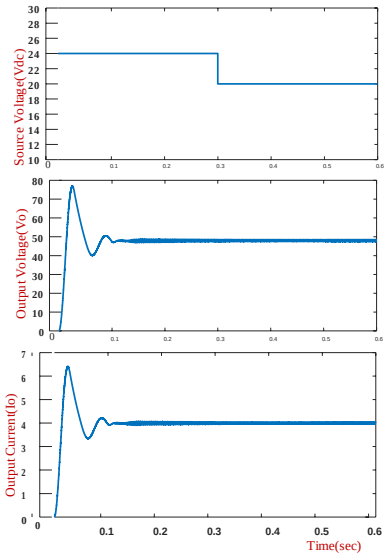

Fig 4.9 input voltage, output voltage, output current for step decrease in PV generation

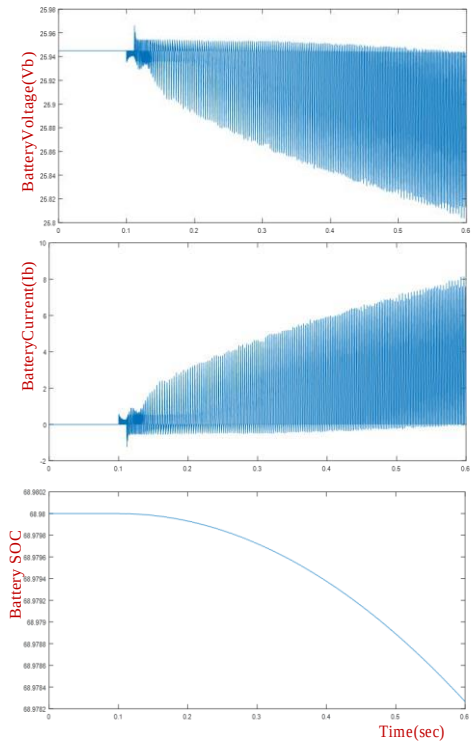

Fig 4. 10 battery scope for step decrease in PV generation

ISSN 2319-5991 www.ijerst.com

Vol. 14, Issue 4, 2018

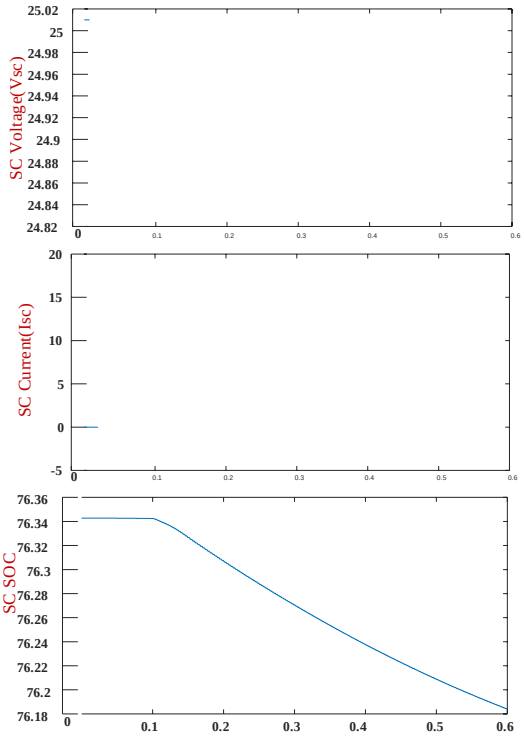

Fig 4.14 Supercapacitor scope for step decrease in PV generation

IV. CONCLUSIONS

4.1 Conclusions

A controller is designed for single input Bi-Directional converter with battery as storage system. Performance of the ESS is analyzed for the source variation case. Controller could effectively stabilize DC micro grid against source voltage variation. Charging and discharging waveforms of the battery are observed during source voltage variation. The battery and super capacitor combined energy storage is presented. The energy balance operation impose severe stress on the battery, if battery alone is used as an energy storage medium. This is mainly because of low power density of battery. Thus, high power density super capacitor is combined with high energy density battery using suitable control strategy to share the imbalance power that exist between the source and load of the micro grid.

Scope of Future Work

This work can be enhanced with a three leg structured Bi-Directional DC-DC converter based hybrid energy storage system to achieve energy exchange between the storage elements also additionally and there is a provision to implement in real time using DSPACE of model 1404.

REFERENCES:

[1] *H-J. Kim, S-W. Kang, G-S. Seo, P Jang, and B-H. Cho*, "Large signal stability analysis of DC power system with shunt active damper", IEEE Transactions on Industrial Electronics, vol. 63, no. 10, pp. 6270-6280, Oct. 2016.

[2] *Z. Zhao, J. Hu, and J. Liu*, "Hierarchical coordinated control of multi bus-based DC micro grid considering fault occurred in buses, "Proceedings of 2016 China International Conference on Electricity Distribution. Xian, Aug. 2016.

[3] *S. Sanchez and M. Molinas*, "Large signal stability analysis at the common coupling point of a DC micro grid: a grid impedance estimation approach based on a recursive method" IEEE Transactions on energy conversion, vol. 30, no. 1, pp. 122-130, Mar. 2015.

[4] *N. R. Tummuru, M.K.Mishra, and S. Srinivas*, "Dynamic energy Management of renewable grid integrated hybrid energy storage systems", *IEEE Transactions Ind. Electron.*, vol. 62, no. 12 , pp. 7728–7737, Dec. 2015.

International Journal of Engineering Research and Science & Technology
ISSN 2319-5991 www.ijerst.com
Vol. 14, Issue 4, 2018

[5] A technical guide in the year 2008 from NESSCAP ultra capacitor company Limited.

[6] *Jn Baker, A. Collinson*, "Electrical energy storage at the turn of the millennium", *Power Engng J 1999*, vol. 13, no. 3, pp. 107-12, 1999.

[7] *J. Xiao, P.Wang, L. Setyawan*, "Hierarchical control of hybrid energy storage system in DC microgrids", *IEEE Trans. Ind. Electron.*, vol. 62, no. 8, pp. 4915–4924, Aug. 2015.

[8] *M. Glavin, P. Chan, S. Armstrong, W. Hurley*, "A stand-alone Photovoltaic super capacitor battery hybrid energy storage system", in *IEEE Power Electronics and Motion Control Conference*, 2008, pp.1688–1695.

[9] *J. Shen and A. Khaligh*, "A supervisory energy management control Strategy for a battery/ ultra capacitor hybrid energy storage system" *IEEE Trans. Transp. Electrific..*, vol. 1, no. 3, pp. 223–231, Oct. 2015.

[10] J. Li *et al.*, "Design and advanced control strategies of a hybrid energy storage system for the grid integration of wind power generations", *IET Renew. Power Gener.*, vol. 9, no. 2, pp. 89–98, 2015