International Journal of Engineering Research and Science & Technology

IJERST

ISSN : 2319-5991



www.ijerst.com

Email: editor@ijerst.com or editor.ijerst@gmail.com

International Journal of Engineering Research and Science & Technology

ISSN 2319-5991 www.ijerst.com

Vol. 20, Issue 1, 2024

Using Internet of Things (IoT) systems for flood monitoring and warning

Mr. N. Murugan, Dr. L. Vigneash,Dr. D. Satyaraj, Mr. P. A. Prassath

Associate Professor [2], Assistant Professor [1,3,4]

nmurugan@actechnology.in, dr.vigneashl@actechnology.in, dsatyaraj@actechnology.in, paprassath@actechnology.in

Department of ECE, Arjun College of Technology, Thamaraikulam, Coimbatore-Pollachi Highway, Coimbatore, Tamilnadu-642 120

ABSTRACT

One of the most catastrophic natural disasters that need attention is flooding. It has killed a lot of people and wreaked havoc on the economy. There are a lot of casualties since there are no early warnings. Using inexpensive components and Internet of Things (IoT) technologies, this study presents a novel approach to flood detection and assessment. The research employs several technologies, such as the NodeMCU and ultrasonic sensors, to precisely identify and quantify the depths of floodwaters. In order to continually monitor distances to the sea surface using ultrasonic waves, the flood detection system incorporates an SR04 sensor with a NodeMCU ESP8266 microprocessor. Using the Arduino IDE, the microcontroller transforms sensor data into a Wi-Fi-compatible format. That way, you may link up with your neighbourhood Wi-Fi and send data to the BLYNK IoT Cloud Platform. When linked, the microcontroller will periodically transmit processed sensor data to the BLYNK Cloud Platform. From anywhere with an internet connection, users of BLYNK may access personalised dashboards that display data on river levels in real-time. They have the ability to visually monitor river levels, which allows for simple data interpretation and efficient flood monitoring.

INTRODUCTION

Worldwide, floods pose a serious danger to life and infrastructure, and they are notoriously difficult to anticipate, making them one of the most devastating and unexpected natural catastrophes. Every year, it causes significant economic disruption and loss of life due to the absence of early warnings. A state-of-the-art flood warning system driven by the Internet of Things (IoT) is our project's attempt to address this pressing problem. In order to provide advance notice about impending floods.Connected devices that can share and receive data over the internet form what is known as the Internet of Things (IoT). Here at our company, we keep tabs on river and stream levels via the Internet of Things. Our technology is designed to

International Journal of Engineering Research and Science & Technology

ISSN 2319-5991 www.ijerst.com

Vol. 20, Issue 1, 2024

automatically notify emergency responders and local government entities if water levels reach dangerously high levels. Communities rely on these warnings to give them the time they need to protect property, make evacuation plans, and take other measures to lessen the effect of the approaching flood.

.

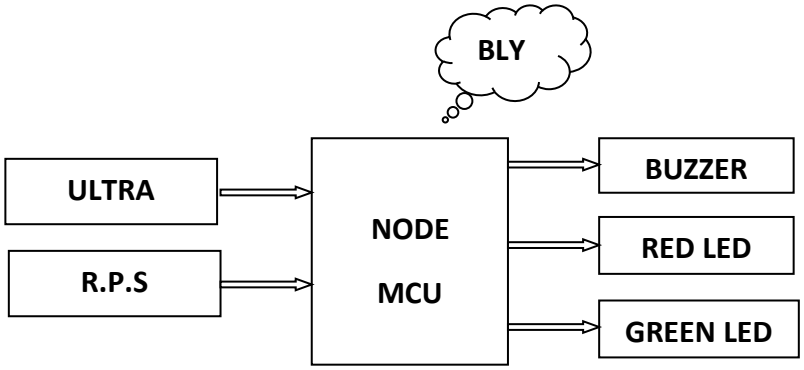

Figure.1 Block Diagram

LITERATURE SURVEY

1.Title: "IoT-Based Flood Monitoring System: A Review of Sensor Technologies and Deployment Strategies"

This study provides a comprehensive review of sensor technologies utilized in IoT-based flood monitoring systems, along with an analysis of various deployment strategies to optimize sensor placement and data collection efficiency.

2. Title: "Real-Time Flood Prediction and Early Warning Using IoT Sensors: A Case Study"

Through a detailed case study, this research demonstrates the effectiveness of real-time flood prediction and early warning systems implemented with IoT sensors, showcasing their practical application in mitigating flood risks in vulnerable regions.

3. Title: "Integration of IoT and Machine Learning for Flood Forecasting and Alert Generation". This paper explores the synergies between IoT sensor data and machine learning algorithms to improve the accuracy and timeliness of flood forecasting models, enhancing early warning systems for at-risk communities.

4. Title: "Design and Implementation of an IoT-Based Flood Monitoring and Warning System in Urban Areas"

International Journal of Engineering Research and Science & Technology

ISSN 2319-5991 www.ijerst.com

Vol. 20, Issue 1, 2024

Focusing on urban environments, this research presents the design and implementation of an IoT-based flood monitoring and warning system, addressing the unique challenges of urban flooding and providing insights into effective urban flood management strategies.

5. Title: "Sensing the Surge: Smart Sensor Networks for Coastal Flooding Prediction"Investigating coastal flooding scenarios, this study proposes the deployment of smart sensor networks to monitor sea-level rise and predict coastal surges, offering valuable insights into coastal flood risk management and resilience planning.

PROPOSED SYSTEM

In the proposed system ultrasonic sensor is positioned near the river to monitor water levels.It sends out ultrasonic waves and measures the time taken for them to reflect back from the water's surface.This time measurement is then converted into a distance, which corresponds to the water level. The NodeMCU microcontroller processes this data and sends it to the BLYNK IoT Cloud Platform. Users can access the BLYNK platform to track the river levels graphically from any location with internet access

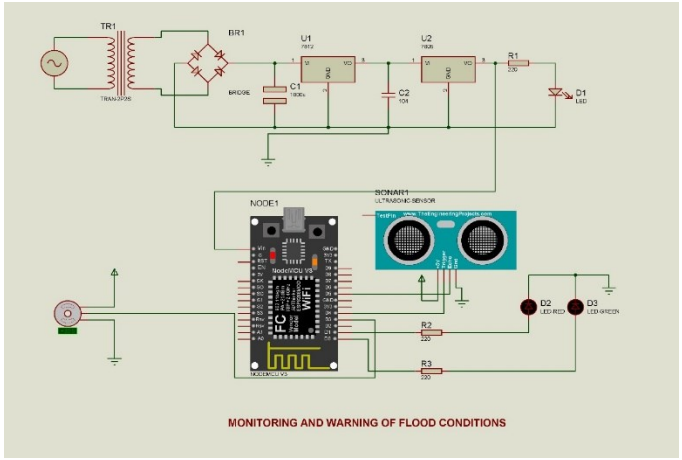

Figure.2 Schematic Diagram

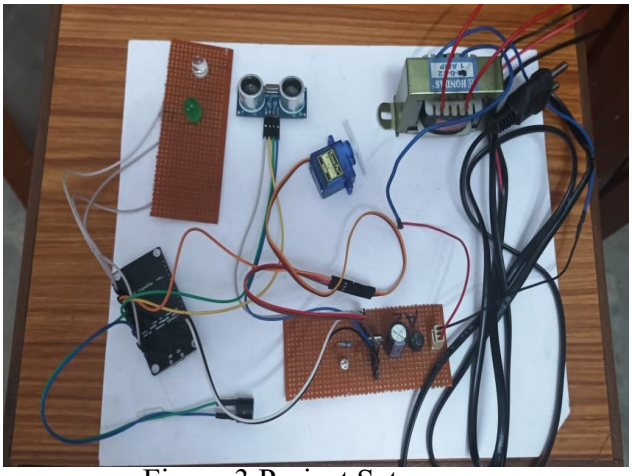

Figure.3 Project Setup

RESULTS

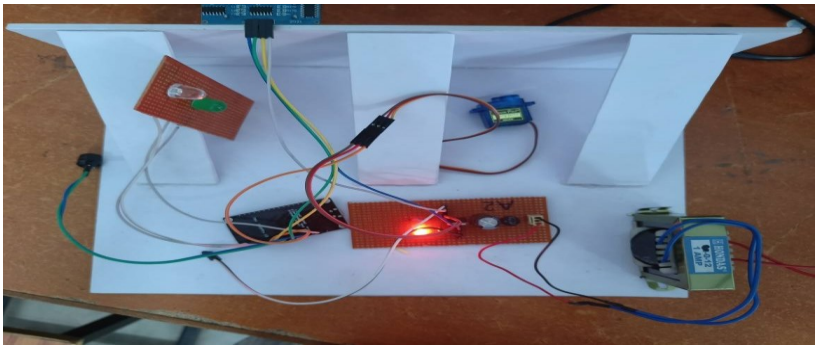

International Journal of Engineering Research and Science & Technology

ISSN 2319-5991 www.ijerst.com

Vol. 20, Issue 1, 2024

Figure.4 Working Figure.

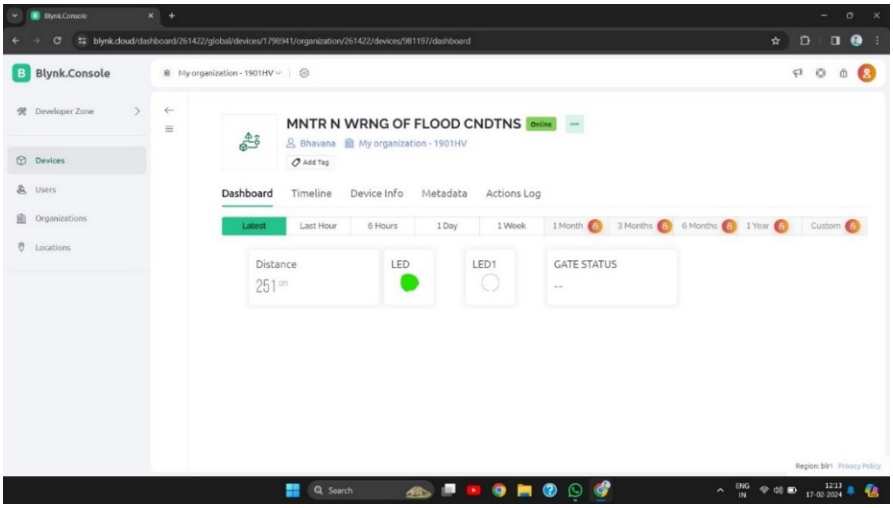

5 Blynk outpu

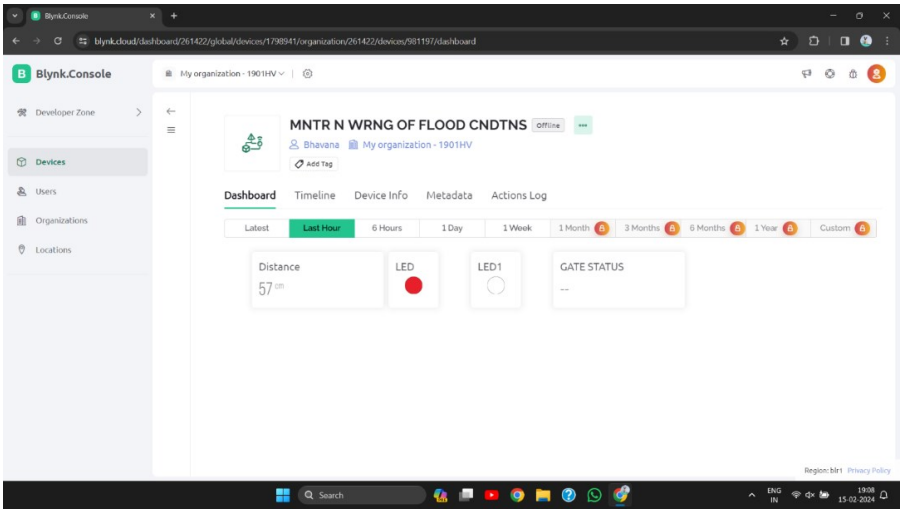

Figure.6 Flooding warning in Blynk app

International Journal of Engineering Research and Science & Technology

ISSN 2319-5991 www.ijerst.com

Vol. 20, Issue 1, 2024

APPLICATIONS

Early Warning Systems: Implementing your system in flood-prone areas can help in the early detection of rising water levels, enabling authorities to issue timely warnings to residents and emergency responders..

Disaster Management: Integrating your system with local disaster management agencies can facilitate better coordination and response during flooding events, including evacuation planning and resource allocation.

Agricultural Management: Farmers can use your system to monitor water levels in irrigation canals and fields, optimizing water usage and crop yield while mitigating the risks of waterlogging and crop damage during floods.

Remote Monitoring: Your IoT-based solution allows for remote monitoring of water levels via the BLYNK platform, making it suitable for applications in remote or inaccessible areas where manual monitoring is challenging.

Water Quality Monitoring: In addition to measuring water levels, your system can incorporate sensors to monitor water quality parameters such as pH, turbidity, and dissolved oxygen levels. This information can help identify pollution sources, track environmental changes, and support water quality management efforts.

ADVANTAGES

Cost-Effectiveness: Using affordable components like the NodeMCU ESP8266 microcontroller and HC-SR04 ultrasonic sensors makes the project cost-effective compared to traditional flood monitoring systems.

Real-Time Monitoring: The integration with the BLYNK IoT Cloud Platform allows users to monitor river levels graphically in real-time from any location with internet access. This provides timely information for decision-making and response during flooding events.

Accessibility: With internet connectivity, your project enables users to access flood data remotely, enhancing accessibility and facilitating quick responses to changing conditions.

Customization: The BLYNK platform allows users to create custom dashboards tailored to their specific monitoring needs. This flexibility enables users to visualize data in a way that is most meaningful to them.

ISSN 2319-5991 www.ijerst.com
Vol. 20, Issue 1, 2024

Early Warning System: By issuing warnings to authorities when river levels exceed predefined thresholds, your project helps in alerting communities about potential flooding risks, enabling timely preventive measures and emergency responses.

CONCLUSION

In conclusion, the project presents a innovative approach to flood detection and monitoring using affordable components and IoT technology. By leveraging ultrasonic sensors, the NodeMCU ESP8266 microcontroller, and the BLYNK IoT Cloud Platform, the system offers real-time monitoring of river levels, enabling timely response to potential flood risks.
The project's cost-effectiveness, accessibility, and user-friendly interface make it a valuable tool for communities facing flood-related challenges. With the ability to issue warnings to authorities and provide graphical visualization of flood data, the system enhances flood preparedness, response, and resilience.

FUTURE SCOPE

Improved accuracy: Enhancing the precision and reliability of flood detection and measurement through advanced sensor technology and calibration techniques.

Integration with public safety systems: Collaborating with public safety agencies to integrate flood monitoring data into existing emergency response systems and enhance disaster preparedness and response capabilities.

Artificial intelligence: Leveraging AI algorithms to analyze big data sets, predict flood events, and optimize response strategies based on historical data and real-time environmental variables.

Remote Sensing Technologies: Exploring the use of satellite imagery, UAVs, and GIS technologies for remote flood monitoring, mapping, and assessment to complement ground-based sensor networks.

REFERENCES

1."Anderson, R., & Birkinshaw, S. (2019). A Review of Flood Early Warning Systems. Procedia Engineering, 212, 144-151."

International Journal of Engineering Research and Science & Technology

ISSN 2319-5991 www.ijerst.com

Vol. 20, Issue 1, 2024

2. "Bischiniotis, K., Nikolopoulos, V., &Ferentinou, M. (2018). A Review on Early Warning Systems for Urban Flood Risk Management. Water, 10(11), 1602."

3. "Pandey, B., & Pandey, K. M. (2020). A Review of Flood Detection and Monitoring Systems Using Internet of Things (IoT) Based Technologies. In Proceedings of the 4th International Conference on Communication, Devices and Computing (pp. 1-7).

4. "Yildirim, O., & Acar, B. (2017). Design and Implementation of a Real-Time Flood Monitoring and Early-Warning System. International Journal of Distributed Sensor Networks, 13(10), 1550147717738851."

5. "Mahdavi, M., & Kerle, N. (2018). Remote Sensing for Urban Flood Management: Bridging the Gap Between Research and Practice. Remote Sensing, 10(12), 1873.