# International Journal of Engineering Research and Science & Technology

IJERST

ISSN : 2319-5991

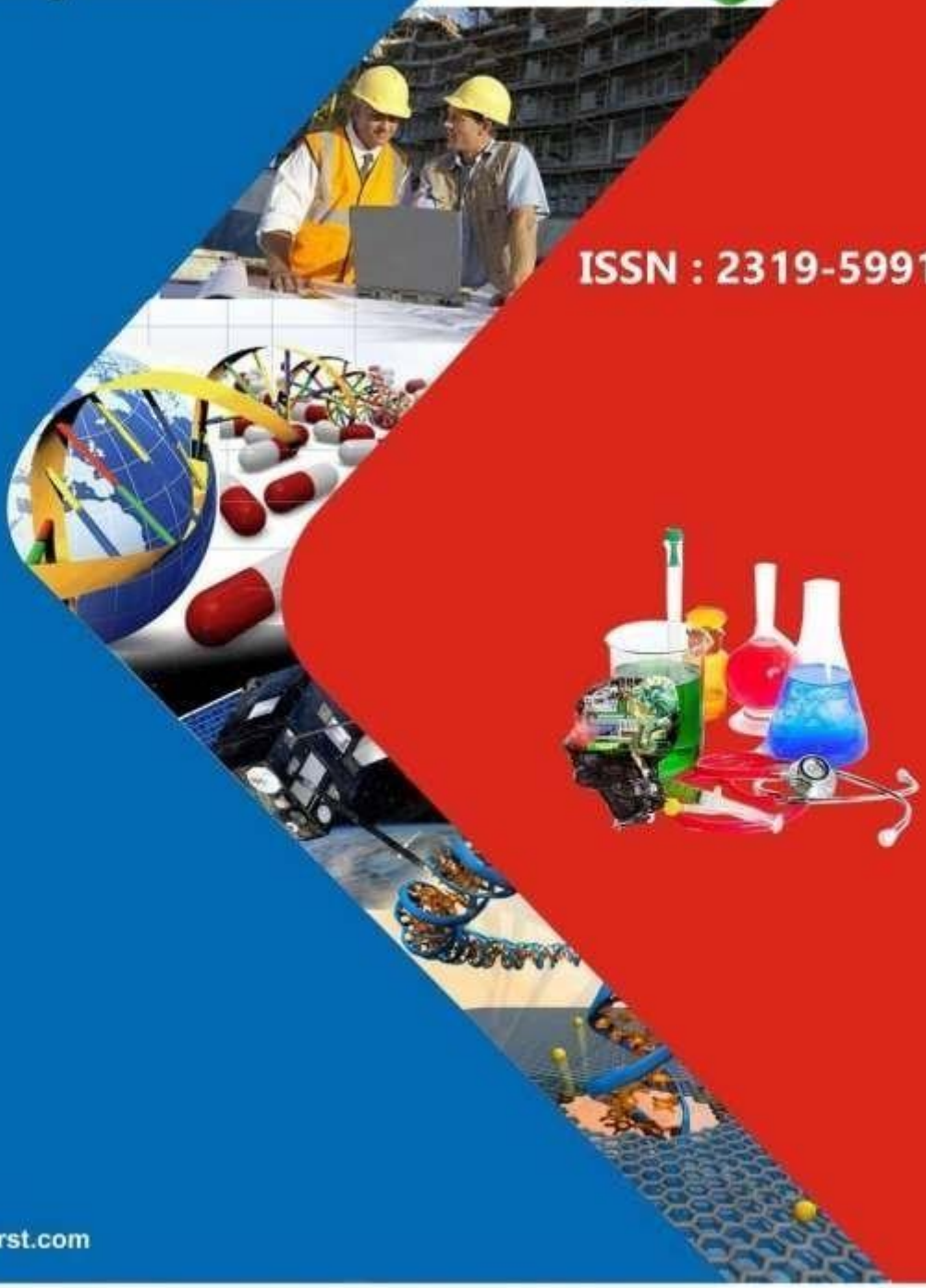

www.ijerst.com

Email: editor@ijerst.com or editor.ijerst@gmail.com

International Journal of Engineering Research and Science & Technology

ISSN 2319-5991 www.ijerst.com

Vol. 20, Issuse.1, March 2024

# HI TECH ENERGY METER FOR SMART CITIES USING GSM TECHNOLOGY

V. R. V. S. SAI VALLI[1] , DHANISETTI ROSHINI[2] , BONGU GIRIJA[3] , MEDISETTI JAHNAVI[4] , VEDURUPAKA PRANAY SAMPATH[5] , REKADI RAMU[6]

[1]Assistant Professor , Dept.of EEE, PRAGATI ENGINEERING COLLEGE

[23456]UG Students,Dept.of EEE, PRAGATI ENGINEERING COLLEGE

## ABSTRACT

In this project, a novel hi-tech energy meter designed specifically for smart cities, leveraging GSM technology for efficient data transmission and management. The proposed energy meter integrates advanced features such as real-time data monitoring, remote meter reading, and automated billing systems, contributing to the development of sustainable and intelligent urban environments. Through GSM connectivity, the meter enables seamless communication between consumers and utility providers, facilitating proactive energy management and enhancing overall grid efficiency. Additionally, the incorporation of smart algorithms allows for predictive maintenance and fault detection, ensuring reliable and uninterrupted energy supply. The implementation of this hi-tech energy meter promises to revolutionize energy management practices in smart cities, fostering energy conservation, cost optimization, and environmental sustainability.

The Aim of proposed system is to propose a different method (Pay & Use) for measuring and billing of the energy consumed rather the conventional method (Use & Pay).Prepaid Electricity Energy Meter is one of the best concepts forthe current electricity payment system. In this system, we canrecharge the device and update the balance as we do on our mobilephones.It can also disconnect the home power supply connection if thereis a low or zero balance in the system.The prepaid energy meter using GSM and Arduino is a smart and efficient solution for managing energy consumption. This system incorporates the use of a GSM module and an Arduino microcontroller to enable remote monitoring and control of energy usage. Users can easily recharge their energy balance through mobile transactions, ensuring a prepaid billing system. The system also includes features like real-time energy monitoring, low balance alerts, and tamper detection. With this technology, users have better control over their energy usage,

International Journal of Engineering Research and Science & Technology
ISSN 2319-5991 www.ijerst.com
Vol. 20, Issuse.1, March 2024

promoting energy conservation and fair billing practices. It's an innovative and practical solution for modern energy management.

## INTRODUCTION

In a world where everything is automated, the automation of the energy payments is much needed. The world is being digitized and it is important that we should be able to move along with trends and changes. Energy is the most common and most important resource and the need for it use it in a controlled manner is crucial where the resources for it are scarce. So, using Prepaid Energy meters helps us to avoid the wastage of power consumed in our daily lives. Moreover, it is also important to protect the revenue of the government from the loss occurs due to the illegal usage of power. Hence, there is a definite need for us to use an advanced energy meters, which can both monitor the consumption and theft.

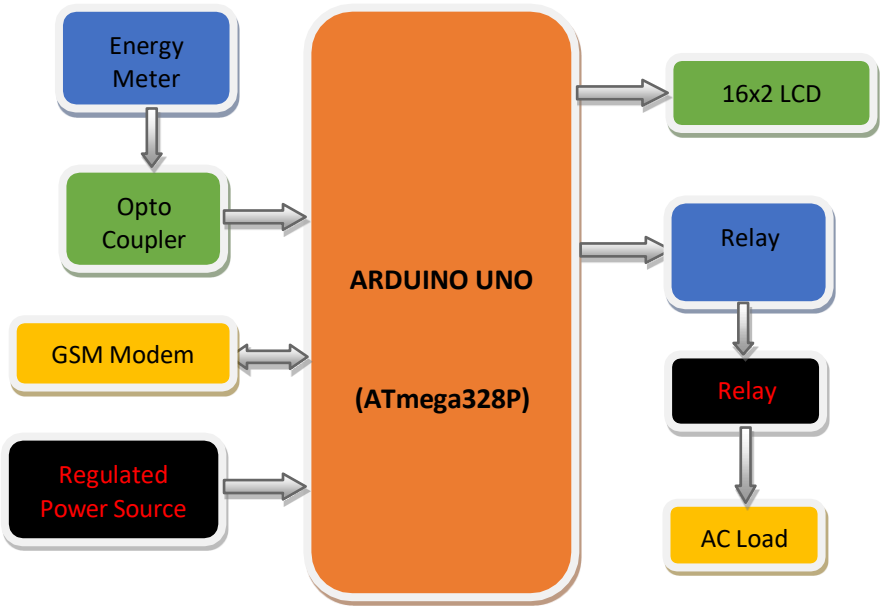


Figure.1 Block Diagram

## LITERATURE SURVEY

1. **GSM Technology in Smart Meters:** Explore how GSM technology is utilized in smart energy meters for remote monitoring, data transmission, and control functionalities.

2. **Smart Cities and Energy Management:** Investigate the role of smart meters in energy management within the context of smart city initiatives, including benefits such as improved efficiency, demand-side management, and integration with other urban systems.

International Journal of Engineering Research and Science & Technology

ISSN 2319-5991 www.ijerst.com

Vol. 20, Issuse.1, March 2024

3. **Metering Techniques and Accuracy:** Review different metering techniques employed in hi-tech energy meters, including advanced metering infrastructure (AMI), and assess their accuracy, reliability, and performance.

**Communication Protocols and Security:** Examine communication protocols used in GSM-enabled energy meters, along with security measures implemented to ensure data privacy and integrity.

**IoT Integration and Data Analytics:** Explore how smart meters contribute to the Internet of Things (IoT) ecosystem in smart cities and how data generated by these meters can be analyzed to optimize energy consumption and inform policy decisions.

## PROPOSED SYSTEM

Smart Prepaid Energy meter using Arduino and GSM can provide the solution to problems discussed. This project helps in not only automating but also for controlled managing of the energy consumed, which results in efficient usage of power. GSM modem is helpful for the message alerts and notifications needed for these purposes. The different components used are controlled by ATmega328P microcontroller . Illegal usage of power, in other words power theft, is a loss to the government's revenue.

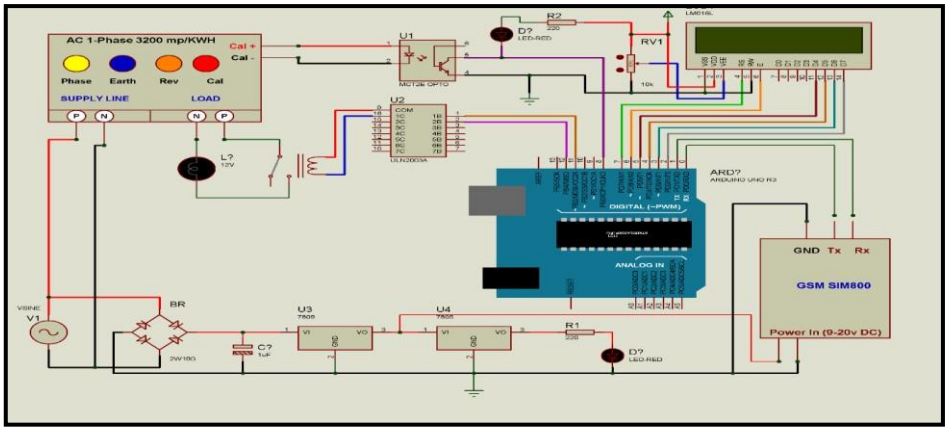


Figure.2 Schematic Diagram

## RESULTS

International Journal of Engineering Research and Science & Technology

ISSN 2319-5991 www.ijerst.com

Vol. 20, Issuse.1, March 2024

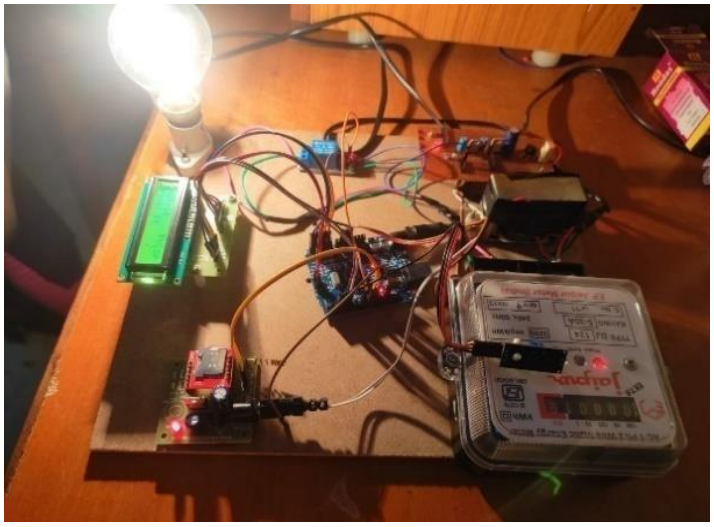

Figure.3 Project Setup

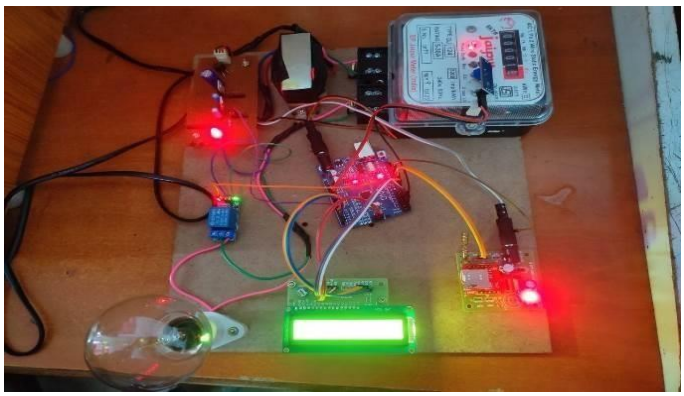

Figure.4 Working kit

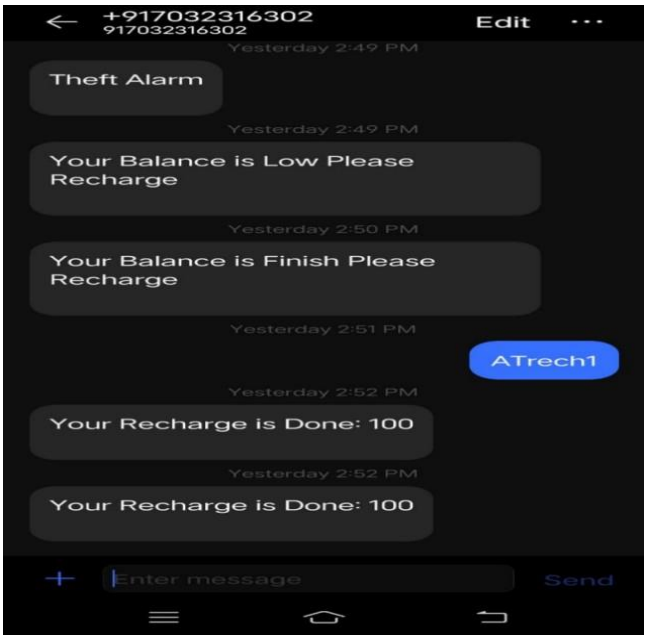


Figure.5 Received Message

International Journal of Engineering Research and Science & Technology

ISSN 2319-5991 www.ijerst.com

Vol. 20, Issuse.1, March 2024

By sending a simple SMS, you can recharge the electricity balance through this system. It can also disconnect the home power supply connection if there is a low or zero balance in the system. And this system will read the energy meter readings and automatically send some updates to the user's mobile phone like low balance alert, cut off alert, resume alert and recharge alert. The Anti-Theft Alert can also be detected when someone tries stealing the meter by opening the lid. So, let us see how we can build this project.

## APPLICATIONS

- Domestic energy consumption application
- Industry energy consumption application
- Commercial energy consumption application like colleges, shopping malls etc
- Domestic Water supply applications.

## ADVANTAGES

- High accuracy over a wide current dynamic range.
- Tamper proofing.
- Reduce financial risks.
- Better customer service.
- Improve operational efficiencies.

## CONCLUSION

Prepaid energy meter with power theft detection is easy to install and beneficial for both energy provider and consumer. This project reduces the manual efforts and human errors, by monitoring all the parameters and functioning of the connections. Also by implementing this system we can control the usage of electricity on consumer side to avoid wastage of power.

An attempt is made in this work to develop a system, which when interfaced with static electronic energy meter is avoided where in complexity of the circuit is reduced and cost also gets reduced of the meter. This system avoids electricity theft to large extent and makes the energy meter tamper proof. This meter increases the revenue of the Government by detecting the unauthorized tampering in the power lines

International Journal of Engineering Research and Science & Technology

ISSN 2319-5991 www.ijerst.com

Vol. 20, Issuse.1, March 2024

## FUTURE SCOPE

The project is a prepaid energy meter using Arduino and GSM can improve for further future. Make it as IOT based energy system to get updates on web servers and can create a mobile app for easy recharge and other consumer complaints. Adding a mini printer to the "prepaid electricity meter" produces the printed bill which the user can keep for the record.

**Enhanced Connectivity:** Future prepaid energy meters could leverage advancements in GSM technology to improve connectivity, ensuring reliable communication for remote monitoring, metering, and payment processing.

**Smart Metering Features:** Integration of advanced metering functionalities, such as real-time data monitoring, load profiling, and predictive maintenance, can enhance the efficiency and reliability of prepaid energy meters.

**Data Analytics and Insights:** Implementing data analytics capabilities within prepaid energy meters can enable utilities to gain valuable insights into consumer behavior, energy usage patterns, and demand forecasting, facilitating better resource management and planning.

**Demand Response Integration:** Prepaid energy meters can be integrated with demand response programs, allowing utilities to incentivize consumers to shift their energy usage during peak hours and optimize grid performance.

**Blockchain-Based Payment Systems**: Adoption of blockchain technology for secure and transparent payment processing can enhance the reliability and trustworthiness of prepaid energy meter transactions, reducing the risk of fraud and improving financial management.

**Energy Trading Platforms:** Introduction of peer-to-peer energy trading platforms enabled by prepaid energy meters can empower consumers to buy, sell, and exchange excess energy within

## REFERENCES

[1] Smart energy metering and power theft control using Arduino & GSM Automated Smart Metering ; (IEEE- 2017)

[2] Hashmi, M.U., & Jayesh, G.P. (2015). Anti-theft Energy Metering for Smart Electrical Distribution System. International Conference on Industrial Instrumentation and Control(ICIC) ,May 28-30

International Journal of Engineering Research and Science & Technology

ISSN 2319-5991 www.ijerst.com

Vol. 20, Issuse.1, March 2024

[3] Ganurkar, S., & Gour, P. (2014). Prepaid Energy Meter for Billing System Using Microcontroller and Recharge Card. International Journal Of Core Engineering & Management (IJCEM) 1, Issue 1, April.

[4] Pradeep Mittall 2015, Wireless Electricity billing system, International Research Journal of Engineering and Technology (IRJET) Volume: 02,pp.21-34.

[5] J.L.Parra and E.A.S.Calderon 2013, Use of shunts detecting equipment for the identification of illegal power outlets, International Journal of Innovative research in science, engineering and technology, pp. 1–4.